XINJE (http://www.xinje.com)

VB5(Basic single-phase type 1.5~2.2KW) Series Inverter Manual

1 Preface

Thanks for using XINJE VB5 series AC Inverters. Please read this manual carefully before you do the operations .This manual describes the procedures for operation and maintenance, including the installation ,parameters setting ,malfunction diagnose and maintenance.

Please pay attention to the following notes:

- Cut off external power supply before installation and wiring.
- Make sure the power supply of main circuit meets the requirement of inverters well, connect the ground terminal to earth.
- Do not t ouch the output terminals and avoid any contact with the shell.
- Do not touch the internal circuit and component after turning power off until the indicating light is off of the digital panel on the inverter ,because high voltage may still remain in the inverter.
- Avoid dirt and dust into the internal of inverters because the component built in inverters is sensitive to static electricity.

2 Delivery checking

Using the following when products are delivered: Is there any damage during the delivery? Are the delivery products the ones that were ordered?

Nameplate

VB5 - 2 1P5

Inverter series name (VB5:VVVF) | Rated voltage: (2:220V) | Capacity(1P5:1.5KW P means radix point)

If there is a problem please contact with Xinje or an authorized distributor.

Dimension（Unit：mm）

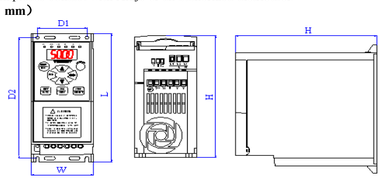

More details please refer to the following diagram:

Model	W	D1	L	D2	H
VB5-21P5	70	56	170	160	162
VB5-22P2					

3 Wiring

Please pay attention to the main circuit and control circuit when do the wiring on AC inverters and refer to the following diagram(the diagram as below is the standard wiring picture). The control circuit is idle during the operation by the digital panel.

(**Note**: VB5-2 inverter as a standard single-phase type connect to power supply with L2(L),L3(N)terminals)

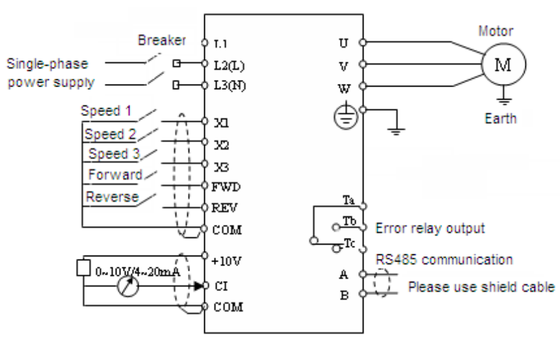

Wiring on main circuit

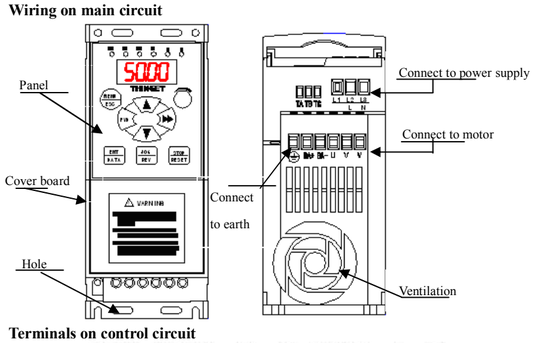

Terminals on control circuit

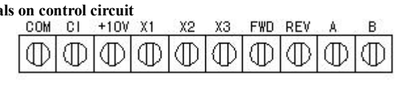

Terminal	Name	Description
COM	Common terminal+24V	As common terminal of digital input and output signal
CI	Analog signal input CI	Receive analog input signal (voltage/current) (earth: GND)
+10V	Power terminal+10V	Provide +10V power supply(cathode :GND)
X1~ X3	Multi-function input terminal	Digital input terminal can be defined with programmable function, more details refer to parameters P4 group(common terminal :COM)
FWD	Forward	Selected by switch command, details refer to P4.08
REV	Reverse	
A	RS485 Terminal	RS485 differential signal "+"
B	RS485 Terminal	RS485 differential signal "-"

Please pay attention to the following suggestions:

- Make sure the power has been completely cut off for more than 10 minutes when you do the wiring, or else there is risk of electric shock.
- Do separating operation on the power line and the inverter output terminal U, V, W .
- Inverters and motor should be grounding because of leakage current within itself. It is advised to use ordinary copper wire whose diameter is above, 3.5mm ² and grounding resistance is less than 10Ω
- All inverters have completely passed the pressure test .
- Contactor and absorption of electromagnetic or other resistance-capacitance capacitor absorbing device can not be installed between the inverter and the motor
- Please connect inverter to power supply through circuit breaker. In order to protect well in the case of over-current and power off.
- Please use shielded twisted wire or cable whose diameter is more than 0.75 mm² when do the wiring on connection between relay and output circuit ,leave one terminal into the space and the other connect to the COM terminal, ensure the wiring line is less than 50m.
- Do the separation on the main circuit and control circuit wiring, if necessary cross the intersection with 90 °.

Function of jumpers

No.	Function	Setting	Default value
JP3	CI input signal selection terminal selection(current/voltage)	Connect 1-2:V side, voltage signal input 0~10V. Connect 2-3:I side, current signal input 4~20mA.	4~20mA

4 Parameters Setting(Refer to attached table)

5 Specification

Electric Specification

Type		VB5-21P5	VB5-22P2
Output	Matched motor(KW)	1.5	2.2
	Rated current(A)	7.5	10.0
	Rated voltage(V)	AC220	
	Frequency Range	0~500	
	Frequency Resolution(Hz)	0.01	
	Over-loading Ability	150%Rated Current for 1 minutes，180% Rated Current for 1 second	
Input	Rated Voltage/Frequency	three-phase 380V,50/60Hz	
	AC voltage permit fluctuate range	Voltage：-20% ～ +20% Voltage Unbalance Rate：<3%	
	Frequency fluctuate Range	Frequency：±5%	
	Power Capacity（KVA）	2.8	4.5

Common Characteristics

Environment	Application environment	In-door, free from direct sunlight, dust, corrosive gas, oil mist, steam, water drop etc
	Elevation	Lower than 1000m（The inverter should be derated when the elevation is higher than 1000m ）
	Ambient Temperature	－10℃～＋40℃
	Humidity	Less than 90%RH，No dry bulb
	Vibration	Less than 5.9 m/s²（0.6M）
	Storage Temperature	－20℃～＋60℃
Structure	Protect Configuration	IP20(In the state of "state display units" or "keyboard"）
	Cooling Manner	Fan cooling
Installation		Surface mounted or install inside cabinet

General Specification

Main Function	Modulation mod	Space Optimized, voltage vector SVPWM modulation
	Frequency precision	Digital Setting: max frequency×±0. 01%; Analog Setting: max frequency×±0.2%
	Frequency resolution	Digital Setting：0.01Hz; Analog Setting：max frequency×0.1%
	Start frequency	0.40Hz～20.00Hz
	Torque boost	Auto torque boost，manual torque boost 0.1%～30.0%
	V/FFFFF curve	Five modes：constant torque V/F curve, 1 V/F curve mode by user and 3 kinds of torque-derating modes (2nd power, 1.7th power, 1.2nd power)
	Accelerate/Decelerate curve	Two modes：linear Acc/Dec, S curve Acc/Dec；seven kinds of Acc/Dec time (Maximum:6000 minutes) and unit(minute or second) is selectable.
	DC braking	Initial frequency of DC braking：0～15.00Hz Braking time：0～60.0 s Braking current：0～80%
	Power consumption braking	Power consumption unit inside, can be connected with external braking resistor
	Jog	Range of jog frequency：0.1Hz～50.00Hz, Acc/Dec time of jog operation 0.1～60.0s
	Internal PI	Be able to form close loop control system easily
	Multi-step speed running	Multi-step speed running can be realized by internal PLC or control terminals
	Textile wobble frequency	Adjustable preset frequency and center frequency
	Auto voltage regulation (AVR)	When the power system voltage changes, maintain the constant of output voltage
	Auto energy saving mode	V/F curve is optimized automatically according to the load condition to realize energy saving operation
	Auto current limiting	running current is limited automatically to avoid trip caused by over-current
	Fix-length control	The frequency inverter will stop when reaching the fixed length
	Communication function	With RS485 port, support Modbus-RTU protocol. Be with master-slave multi-devices linkage function
Running function	Command mode	Operated by three mode: digital panel, control terminal, serial port
	Frequency setting mode	Setting modes can be selected ,including: potentiometer setting mode；▲&▼ keys setting mode；digital function code setting mode; serial port setting mode；UP/DOWN terminal setting mode；analog voltage setting；analog current setting; pulse setting；combination setting;
	Digital input channel	Forward/Reverse running command；6 channels programmable digital input，can set 35 kinds of function，X6 support 0~20KHz pulse output
	Analog input channel	channel analog input ，4～20mA and 0～10V can be selected
	Analog output channel	1 channel analog output，4～20mA、0～10V can be selected.
	digital output channel	Programmable open-collector output,1 channel; relay output signal ,1 channel
Digital panel	LED Display	indicate parameters: frequency ,output voltage, output current and so on.
	connected device display	Indicate physical quantities, such as output frequency, output current ,output voltage and so on
	key Lock	Lock all the keys
	Parameter Copy	Copy function parameters between two inverters by remote control(developing)
protect function		Over current protection；over voltage protection；under voltage protection；over heat protection；over load protection
Option parts		extension cable of digital panel; brake resistor

6 Alarm diagnoses and solutions

The LED lights indicate alarm code automatically when there is a problem in the inverters, at the same time ,the alarm relay takes into action ,leading the inverter to a stop. Note the running motor coasts to a stop when alarm appears . Causes and solutions can be checked out based on the error code, and device built in inverter records the latest 6 errors, more details please refer to the parameters group P6.

Note: Press Stop/Reset key to reset the alarm elimination the cause of the alarm first.

Alarm code	Description	Causes	Solutions
E-01	Over-current during acceleration	Over-load, Acc time is not enough	Make the Acc time longer
		V/F setting is not well	Set the V/F parameters
		Do the restart operation on the running motor	Use the speed inspection function when re-start
		Torque boost is much higher	Improve the torque boost in manual mode or turn to auto torque-boost mode
		Power of inverter is not enough	Use the inverter with greater power
E-02	Over-current during deceleration	Dec time is not enough	Take the Dec time longer
		Load caused by potential energy or inertia	Increase the brake power on the brake unit
		Power of inverter is not enough	Use the inverter with greater power
E-03	Over-current during constant speed	Load breaks	Load checking or reduce the changing of load
		Acc/Dec time is not enough	Take the Acc/Dec time longer
		Abnormal load	Load checking
		Voltage grid is not enough	Check the power supply
		Power of inverter is not enough	Use the inverter with greater power
E-04	Over-voltage during acceleration	Abnormal input voltage	Check the power supply
		Acc time is not enough	Make the Acc time longer
		Do the restart operation on the running motor	Use the speed inspection function when re-start
E-05	Over-voltage during deceleration	Dec time is not enough	Make the Dec time longer
		Load caused by potential energy or inertia	Increase the brake power on the brake unit
E-06	Over-voltage during deceleration	Abnormal input voltage	Check the power supply
		Acc/Dec time is not enough	Take the Acc/Dec time longer
		Abnormal input voltage	Use input reactor
		Inertia load is great	Use brake unit
E-07	over voltage of control power supply	Abnormal input voltage	Check input power
E-08	Overheating	Vent obstructed	Clean the vent
		Over environment temperature	Improve the vent condition ,reduce the frequency of carrier wave
		Fan is damaged	Change the fan
		Abnormal IGBT module	Get help
E-09	Overload on inverter	Acc time is not enough	Make the Acc time longer
		DC braking amount is too high	Reduce DC braking current ,make the braking time longer
		V/F is not good	Set the V/F parameters and torque boost
		Do the reset operation on the running motor	Use the speed inspection function when re-start.
		Voltage grid is not enough	Check the voltage grid
		Over load	Use the inverter with greater power
E-10	Overload on motor	V/F is not good	Set the V/F parameters and torque boost
		Voltage grid is not enough	Check the voltage grid
		General motor running at a low speed with high load for a long time.	Use motor for frequency conversion in the case of a low speed
		Incorrect setting on parameters for overload protection	Check the parameters setting on over-load protection
		Motor is blocked or overload	Check the load
E-11	voltage during running is not enough	Voltage grid is not enough	Check the voltage grid
E-12	IGBT protection	Moment over-current	Refer to over-current solution
		Short-circuit among 3-phase or short-circuit to ground	Rewiring
		Vent is obstructed or fan is damaged	Clean the vent or change the fan
		Environment temperature is too high	Reduce the environment temperature
		Wires or connectors of control board are loose	Check and rewiring
		Current waveform distorted due to output phase loss	Check the wiring
		Auxiliary power is damaged ,driven voltage is not enough	Contact with a distributor or Xinje
		Abnormal control panel	Contact with a distributor or Xinje
E-13	External device fault	Emergency stop terminal close for external device	Cut the emergency stop terminal after remove the fault
E-14	circuit for current detection fault	Wires or connectors of control board are loose	Check and rewiring
		Auxiliary power is damaged	Contact with a distributor or Xinje
		Hall element is damaged	Contact with a distributor or Xinje
		Amplifying circuit is abnormal	Contact with a distributor or Xinje
E-15	RS485 communication error	Incorrect baud rate setting	set the baud rate.
		Error on serial port communication	Press STOP/RESET key to reset, or contact with a distributor or Xinje
		Parameters on alarm setting incorrect	Set parameter P3.09～P3.12
		Host PC is not working	Check host PC and wiring
E-16	System interfere	Strong interfere	Press STOP/RESET key to reset or use power filter
		Read/write error on main control panel DSP	Press key to reset or contact with a distributor or Xinje
E-17	E^2PROM Read/write error	Error on control	Press STOP/RESET key to reset or contact with a distributor or Xinje

Parameters setting

"○": Means the parameters can be modified during running.
"×": Means the parameters don't be allowed to be modified during running
"＊": Read only, can't be modified

Basic parameters (Group P0)

Group P0:Basic Parameters					
Code	Name	Range	Unit	Default setting	Note
P0.00	Control mode	0：V/F control 1 ： Open-loop vector control	1	0	×
P0.01	Frequency setting mode	0： Set by potentiometer on panel. 1 ： Set by Increase/Decrease key 2：Digital setting1,means by digital panel 3：Digital setting2,means by UP/DOWN terminal 4 ： Digital setting3,means by serial port communication 5： By input analog signal VI(VI-GND) 6：By input analog signal CI(CI-GND)） 7：By input pulse signal（PULSE） 8： Group setting (refer to P3.00)	1	0	○
P0.02	Frequency value setting	Upper limit P0.19~lower limit P0.20	0.01Hz	50.00Hz	○
P0.03	Running mode	0： By digital panel 1：By terminal 2: By serial port communication	1	0	○
P0.04	Running direction setting	Unit' s place： 0：jog forward via panel 1：jog reverse via panel Ten' s place： 0：permit reverse 1：prohibit reverse	1	00	○
P0.05	FWD/REV Dead time	0.0～120.0s	0.1s	0.1s	○
P0.06	Max. value of output frequency	50.00Hz～500.00Hz	0.01Hz	50.00Hz	×
P0.07	Basic running frequency	1.00Hz～500.00Hz	0.01Hz	50.00Hz	×
P0.08	Max value of voltage	1～480V	1V	Rated value	×
P0.09	Torque boost	0.0%～30.0%	0.1%	2.0%	○
P0.10	cut-off frequency for torque boost	0.00Hz～Basic running frequency P0.07	0.00	25.00Hz	○
P0.11	Torque boost mode	0：manual 1：Auto	1	0	○
P0.12	Carrier wave frequency	1.0K～14.0K	0.1K	Dependent on inverter's model	×
P0.13	Acc/Dec mode	0：Liner Acc/Dec 1：S curve Acc/Dec	1	0	×
P0.14	Keep time when S curve at a low speed	10.0 % ～ 50.0 %（Acc/Dec time） P0.14＋P0.15＜90%	0.1%	20.0%	○
P0.15	Time for S curve in form of a line	10.0 % ～ 80.0 %（Acc/Dec） P0.14＋P0.15＜90%	0.1%	60.0%	○
P0.16	Acc/Dec time unit	0：Second 1: Minute	0	0	×
P0.17	Acc time 1	0.1～6000.0	0.1	Dependent on inverter's model	○
P0.18	Dec time 1	0.1～6000.0	0.1	Dependent on inverter's model	○
P0.19	Upper limit frequency	Lower limit frequency～Max, value of output frequency P0.06	0.01Hz	50.00Hz	×
P0.20	Lower-limit frequency	0.00Hz ～ upper-limit frequency	0.01Hz	0.20Hz	×
P0.21	Lower-limit frequency mode	0：Run at a lower-limit frequency 1：Stop	1	0	×
P0.22	V/F setting	0：constant torque curve 1：torque-reducing curve 1（1.2 order） 2：torque-reducing curve 2（1.7 order） 3 ： torque-reducing curve 3（2.0 order） 4 ： multi-segment V/F curve	1	0	×
P0.23	V/F frequency value P1	0.00～P0.25	0.01Hz	0.00Hz	×
P0.24	V/F voltage value V1	0～ P0.26	0.1%	0.0%	×
P0.25	V/F frequency value P2	P0.23 ～ P0.27	0.01Hz	0.00Hz	×
P0.26	V/F voltage value V2	P0.24 ～ P0.28	0.1%	0.0%	×
P0.27	V/F frequency value P3	P0.25 ～ P0.07 basic running frequency	0.01Hz	0.00Hz	×
P0.28	V/F voltage value V3	P0.26 ～ 100.0%	0.1%	0.0%	×

Frequency setting parameters(Group P1)

Group P1：Frequency setting parameters					
Code	Name	Setting range	Unit	Default setting	Note
P1.00	Constant time of analog filter	0.01～30.00s	0.01s	0.20s	○
P1.06	CI Gain	0.01～ 9.99	0.01	1.00	○
P1.07	Min reference of CI	0.00～ P1.09	0.01V	0.00V	○
P1.08	Frequency value on Min. reference of CI.	0.00～upper limit frequency	0.01Hz	0.00Hz	○
P1.09	Max .reference of CI.	P1.07 ～10.00V	0.01V	10.00V	○
P1.10	Frequency value on Max .reference of CI.	0.00～upper-limit frequency	0.01Hz	50.00Hz	○
P1.16	Input mode of CI	0：4～20mA 1：0～10V	-	0	○

Starting & Braking Parameters(Group2)

P2 Group：starting and braking parameters					
Code	Name	Setting Range	Unit	Default setting	Note
P2.00	Starting mode	0:Start from the starting frequency 1: Brake first and then start from the starting frequency 2:Restart on speed checking	1	0	×
P2.01	Starting frequency	0.20～20.00Hz	0.01Hz	0.50Hz	○
P2.02	Holding time of starting frequency	0.0～30.0s	0.1s	0.0s	○
P2.03	DC injection braking current at start	0.0～80.0%	0.1%	0%	○
P2.04	DC injection braking time at start	0.0～60.0s	0.1s	0.0s	○
P2.05	Stopping mode	0:Dec-to-stop 1:Coast-to-stop 2:Dec-to-stop +DC braking	1	0	×
P2.06	DC injection braking initial frequency at stop	0.0～15.00Hz	0.0Hz	3.00Hz	○

P2.07	DC injection braking waiting time at stop	0.0～60.0s	0.1s	0.0s	○
P2.08	DC injection braking current at stop	0.0～80.0%	0.1%	0.0%	○

Auxiliary running parameters(Group3)

Group P3：Auxiliary running parameters					
Code	**Name**	**Setting range**	**Unit**	**Default setting**	**Note**
P3.00	Combination setting of frequency input	4:External pulse reference＋CI 5:External pulse reference－CI 8:RS485 ＋ CI ＋ Increase/Decrease key reference 9:RS485 － CI － Increase/Decrease key reference 10:RS485＋CI＋External pulse reference 11:RS485－CI－External pulse reference	1	0	×
P3.01	Lock on initialization of parameters	Unit's place： 0:All parameters can be modified. 1:Only P3.01 can be modified 2:Only P0.02 and P3.01 can be modified Ten's place： 0:Disabled 1:Restore to default setting 2:Clear fault record	1	00	×
P3.03	Auto energy-saving function	0:Disabled 1:Enable	1	0	×
P3.04	AVR function	0:Disabled 1:Enable all the time 2:Disabled in Dec process	1	0	×
P3.05	Gain of slip compensation	0～150%	1%	0%	×
P3.06	Jog operating frequency	0.10～50.00Hz	0.01Hz	5.00Hz	○
P3.07	Acc time of jog operation	0.1～60.0s	0.1s	5.0s	○
P3.08	Dec time of jog operation	0.1～60.0s	0.1s	5.0s	○
P3.09	Communication setting	LED unit's place：baud rate selection 0:1200BPS 1:2400BPS 2:4800BPS 3:9600BPS 4:19200BPS 5:38400BPS LED ten's place：data format 0:1－7－2 format，no parity check 1:1－7－1 format，Odd 2:1－7－1 format，Even 3:1－8－2 format，None 4:1－8－1 format，Odd 5:1－8－1 format，Even 6:1－8－1 format，None (Please select data mode 3～6 during Modbus-RTU communication LED hundred's place: undefined	1	054	×
P3.10	Station address	0～248 0:Broadcast address 248:Take inverter as the host（in developing）	1	1	×
P3.11	Communication detection overtime	0.0～1000.0s 0.0：Detection is not available	0.1s	0.0s	×
P3.12	Delay time of response	0～1000ms	1	5ms	×
P3.13	proportion of communication frequency	0.01～1.00	0.01	1.00	×
P3.14	ACC time2	0.1～6000.0	0.1	10.0	○
P3.15	Dec time2	0.1～6000.0	0.1	10.0	○
P3.16	ACC time3	0.1～6000.0	0.1	10.0	○
P3.17	Dec time 3	0.1～6000.0	0.1	10.0	○
P3.18	ACC time4	0.1～6000.0	0.1	10.0	○
P3.19	Dec time 4	0.1～6000.0	0.1	10.0	○
P3.20	ACC time 5	0.1～6000.0	0.1	10.0	○
P3.21	Dec time 5	0.1～6000.0	0.1	10.0	○
P3.22	ACC time 6	0.1～6000.0	0.1	10.0	○
P3.23	Dec time 6	0.1～6000.0	0.1	10.0	○
P3.24	ACC time 7	0.1～6000.0	0.1	10.0	○
P3.25	Dec time 7	0.1～6000.0	0.1	10.0	○
P3.26	Multi-frequency 1	Lower-limit frequency ～ Upper-limit frequency	0.01Hz	5.00Hz	○
P3.27	Multi-frequency 2	Lower-limit frequency ～ Upper-limit frequency	0.01Hz	10.00Hz	○
P3.28	Multi-frequency 3	Lower-limit frequency ～ Upper-limit frequency	0.01Hz	20.00Hz	○
P3.29	Multi-frequency 4	Lower-limit frequency ～ Upper-limit frequency	0.01Hz	30.00Hz	○
P3.30	Multi-frequency 5	Lower-limit frequency ～ Upper-limit frequency	0.01Hz	40.00Hz	○
P3.31	Multi-frequency 6	Lower-limit frequency ～ Upper-limit frequency	0.01Hz	45.00Hz	○
P3.32	Multi-frequency 7	Lower-limit frequency ～ Upper-limit frequency	0.01Hz	50.00Hz	○
P3.33	Skip frequency1	0.00～500.00Hz	0.01Hz	0.00Hz	×
P3.34	Range of Skip frequency1	0.00～30.00Hz	0.01Hz	0.00Hz	×
P3.35	Skip frequency2	0.00～500.00Hz	0.01Hz	0.00Hz	×
P3.36	Range of Skip frequency 2	0.00～30.00Hz	0.01Hz	0.00Hz	×
P3.37	Skip frequency 3	0.00～500.00Hz	0.01Hz	0.00Hz	×
P3.38	Range of Skip frequency 3	0.00～30.00Hz	0.01Hz	0.00Hz	×
P3.39	Runtime setting	0～65.535K hours	0.001K	0.000K	○
P3.40	Runtime Accumulating time	0～65.535K hours	0.001K	0.000K	*
P3.41	Parameters display setting1	0000～FFFF Unit's place：b-09～b－12 Ten's place：b-13～b－16 Hundred's place：b-17～b－20 Thousand's place：b-21～b－24	1	0000	○
P3.42	Parameters display setting 2	0000～FFFF Unit's place：b-25～b－28 Ten's place：b-29～b-32 Hundred's place：b-33～b-36 Thousand's place：b-37～b-40	1	0000	○
P3.43	Parameters display setting 3	0000～4040 Ten's place, unit's place ：stop Parameters display setting Thousand's place, hundred's place ：run Parameters display setting	1	0001	○
P3.44	Display coefficient without unit	0.1～60.0	0.1	1.0	○
P3.45	JOG/REV shift control mode	0：select JOG to start jog 1：select REV start reverse	1	0	×

Parameters of Terminal function (Group4)

P4： Parameters of Terminal Function					
Code	**Name**	**Setting range**	**Unit**	**Default setting**	**Note**
P4.00	Terminal function setting X1	0：Idle 1:Multi-segment speed control terminal 1 2：Multi-segment speed control terminal 2 3：Multi-segment speed control terminal3 4：External terminal for forward jog operation 5：External terminal for reverse jog operation 6：Acc/Dec time terminal 1 7：Acc/Dec time terminal 2 8：Acc/Dec time terminal 3 9： control with 3-leads 10： Input for coasting to a stop(FRS) 11：External stop command 12：DC injection braking command DB 13:Prohibit of Inverter running. 14:Increase frequency reference（UP） 15: Frequency reference(down)（DOWN）Decrease 16:Acc/Dec prohibit 17:External resetting input(remove alarm) 18:Alarm of external device input(open contact) 19:Frequency setting selection 1 20：Frequency setting selection 2 21：Frequency setting selection 3 22：Change control mode from command to terminal 23:command control mode1 24：command control mode1 2 25： Start Pendulum Frequency 26：Reset Pendulum Frequency 27：Close-loop is not available 28：stop reference by PLC 29： PLC is not available 30:Reset the PLC stop status 31：Frequency reference is input via CI 32： Counter trigger signal input 33：Counter clean signal input 34： External interrupt input	1	1	×
P4.01	Function setting for terminal X2	As above	1	2	×
P4.02	Function setting for terminal X3	As above	1	3	×
P4.06	Fwd function setting for X7	As above	1	0	×
P4.07	REV function setting for X8	As above	1	0	×
P4.08	FWD/REV running mode	0:control mode with 2-leads1 1:control mode with 2-leads 2 2:control mode with 3-leads 1 3:control mode with 3-leads 2	1	0	×
P4.09	UP/DOWN speed setting	0.01－99.99Hz/s	0.01	1.00Hz/s	○
P4.11	Relay output	0:Inverter running（RUN） 1:Frequency arriving signal（FAR） 2:Frequency detection threshold（FDT1） 3:Frequency detection threshold（FDT2） 4:Overload pre-alarm（OL）） 5: Locking status by under-voltage（LU） 6:Stop by external alarm （EXT） 7:Output frequency at upper-limit value（FH） 8:Output frequency at lower-limit value（Fl） 9:Running at zero-speed 10:Simple PLC Pause running finished 11:PLC stops after one cycle running 12:Specified counting value arriving 13:Mid counting value arriving 14:Inverter is ready to start（RDY） 15:Fault 16:Running at start frequency 17:Start DC injection braking time 18:Stop in a braking status 19:Pendulum Frequency limited by upper &lower limit value 20:Specified running time arriving	1	0	×
P4.12	Frequency arrive at detecting range(FAR)	0.00～50.00Hz	0.01Hz	5.00Hz	○
P4.13	FDT1 （Frequency）Level	0.00～upper-limit frequency	0.01Hz	10.00Hz	○
P4.14	FDT1 lag	0.00～50.00Hz	0.01Hz	1.00Hz	○
P4.15	FDT2 （Frequency）Level	0.00～upper-limit frequency	0.01Hz	10.00Hz	○
P4.16	FDT2 lag	0.00～50.00Hz	0.01Hz	1.00Hz	○
P4.22	Specified counting value arriving set value	P4.23～9999	1	0	○
P4.23	Mid counting value arriving set value	0～P4.22	1	0	○
P4.24	Overload pre-alarm detection level	20%～200%	1	130%	○
P4.25	Delay time of over load pre-alarm	0.0～20.0s	0.1s	5.0s	○

Protective function parameters (Group P5)

Group P5:Protective function parameters					
Code	**Name**	**Setting value**	**Unit**	**Default setting**	**Note**
P5.00	Motor overload protection mode	0:Output of inverter is locked 1:Not available	1	0	×
P5.01	Motor's overload protection coefficient	20～120%	1	100%	×
P5.02	Protection of over load at stall	0:Disable 1:Enabled	1	1	×
P5.03	Over voltage point at stall	380V：120～150% 220V：110～130%	1%	140% 120%	○
P5.04	Auto current limiting threshold	110%～200%	1%	150%	×
P5.05	Frequency decrease rate when current limiting	0.00～99.99Hz/s	0.01Hz/s	10.00Hz/s	○
P5.06	Auto current limiting selection	0:constant speed is not available 1:constant speed is available Note: Acc/Dec is available all the time	1	1	×
P5.07	Restart setting after power off	0:Not available 1:Avaiable	1	0	×
P5.08	Holding time of restart after power off	0.0～10.0s	0.1s	0.5s	×
P5.09	Times for auto-restoring from alarm	0～10 0: function of auto-restoring is not available （Note ：auto-restoring function is not available at overload and overheat status）	1	0	×
P5.10	Auto reset interval of fault	0.5～20.0s	0.1s	5.0s	×

Fault recording parameter (Group P6)

Group P6:Fault recording parameter					
Code	**Name**	**Description**	**Unit**	**Default setting**	**note**
P6.00	Record of previous fault	Previous fault record	1	0	*
P6.01	Output frequency of Previous fault	Output frequency of previous fault record	0.01Hz	0	*
P6.02	Setting frequency of previous fault	Setting frequency of previous fault	0.01Hz	0	*
P6.03	Output current of previous fault	Output current of previous fault	0.1A	0	*
P6.04	Output voltage of previous fault	Output voltage of previous fault	1V	0	*
P6.05	DC-bus voltage of previous fault	DC-bus voltage of previous fault	1V	0	*
P6.06	Module temperature of previous fault	Module temperature of previous fault	10C	0	*
P6.07	2 latest fault record	2 latest fault record	1	0	*
P6.08	3 latest fault record	3 latest fault record	1	0	*
P6.09	4 latest fault record	4 latest fault record	1	0	*
P6.10	5 latest fault record	5 latest fault record	1	0	*
P6.11	6 latest fault record	6 latest fault record	1	0	*

Close-loop control parameters (Group P7)

Group P7：Close-loop control parameters					
Code	**Name**	**Setting range**	**Unit**	**Default setting**	**Note**
P7.00	Close-loop control mode	0:Close-loop control is not available 1:Close-loop control is available	1	0	×
P7.01	Reference channel	0:set by digital input 1:set by VI analog signal（0～10V） 2:set by CI analog signal	1	1	○
P7.02	Feedback channel	0:set by VI analog signal(0～10V) 1:et by CI analog signal 2:VI+CI 3:VI-CI 4:Min｛VI，CI｝ 5:Max｛VI，CI｝	1	1	○
P7.03	Reference filter	0.01～50.00s	0.01s	0.50s	○
P7.04	Feedback filter	0.01～50.00s	0.01s	0.50s	○
P7.05	Set reference in digital mode	0.00～10.00V	0.01V	0.00V	○
P7.06	Min reference	0.0～P7.08 Max reference P7.08	0.1%	0.0%	○
P7.07	Feedback value corresponding to min reference	0.0～100.0%	0.1%	0.0%	○
P7.08	Max reference	Min reference P7.06～100.0%	0.1%	100.0%	○
P7.09	Feedback value corresponding to max reference	0.0～100.0%	0.1%	100.0%	○
P7.10	Proportional gain KP	0.000～999.9	0.001	5.0	○
P7.11	Integral gain KI	0.001～999.9	0.001	5.0	○
P7.12	Sampling cycle T	0.01～10.00S	0.01	1.00	○
P7.13	Limits of deviation	0.0～20.0%	1%	2.0%	○
P7.14	Close loop adjustment characteristic	0:Forward 1:Reverse Note: relationship between reference temperature and speed	1	0	×
P7.15	Integral adjustment selection	0:Stop integral adjustment selection when the frequency reaches upper limit or lower limits 1：Continue the integral adjustment selection when the frequency reaches high limit or lower limits	1	0	×
P7.16	Close loop preset frequency	0～upper limit of frequency	0.01Hz	0.00Hz	○
P7.17	Holding time of close loop	0.0～250.0s	0.1s	0.1s	×
P7.18	Threshold of zero-frequency operation	0.00～500.00Hz	0.01Hz	0.01Hz	×
P7.19	Hysteresis of zero-frequency operation	0.00～500.00Hz	0.01Hz	0.01Hz	×

Simple PLC operation parameters (Group P8)

Group P8： Simple PLC operation parameters					
Code	**Name**	**Setting range**	**Unit**	**Default setting**	**Note**
P8.00	Simple PLC operation mode selection	0000～1113 Unit's place: mode selection 0:Disabled 1:Stop after single cycle of operation 2:Holding at the final value after single cycle of operation 3:Operate continuously Ten's place: PLC restarting mode after stopping 0:Run again from stage 1 1:Continue to run from the stopping stage Hundred's place： Save at power off 0:Not saving 1:Save the time and frequency at power off Thousand's place :Selecting the unit of time 0:second 1:minute	1	0000	×
P8.01	Stage 1 setup	000～621 Unit's place of LED：frequency setup 0：Multi i（i＝1～7） 1: Frequency is decide by P0.01 Ten's place of LED：Operating direction selection 0：Run forward 1：Run reverse 2：Decided by operating instructions Hundred's place of LED：Acc/Dec time selection 0：Acc/Dec time 1 1：Acc/Dec time 2 2：Acc/Dec time 3 3：Acc/Dec time 4 4：Acc/Dec time 5 5：Acc/Dec time 6 6：Acc/Dec time 7	1	000	○
P8.02	Operating time in stage 1	0.1～6000.0	0.1	10.0	○
P8.03	Stage 2 setup	000～621	1	000	○
P8.04	Operating time in stage 1	0.1～6000.0	0.1	10.0	○
P8.05	Stage 2 setup	000～621	1	000	○
P8.06	Operating time in stage 1	0.1～6000.0	0.1	10.0	○
P8.07	Stage 2 setup	000～621	1	000	○
P8.08	Operating time in stage 1	0.1～6000.0	0.1	10.0	○
P8.09	Stage 2 setup	000～621	1	000	○
P8.10	Operating time in stage 1	0.1～6000.0	0.1	10.0	○
P8.11	Stage 2 setup	000～621	1	000	○
P8.12	Operating time in stage 1	0.1～6000.0	0.1	10.0	○
P8.13	Stage 2 setup	000～621	1	000	○
P8.14	Operating time in stage 1	0.1～6000.0	0.1	10.0	○

Wobble and measure function parameters (Group 9)

Group 9：Traverse and measure function parameters (Group 9)					
Code	**Name**	**Setting range**	**Unit**	**Default setting**	**Note**
P9.00	Wobble function selection	0:Disabled 1: Enabled	1	0	×
P9.01	Wobble operation control mode	00～11 Unit's place of LED: Start mode 0:Auto mode 1:Manual mode Ten's place of LED：Amplitude control 0:Variable amplitude 1:Fixed amplitude	1	00	×
P9.02	Pre-wobble frequency	0.00～500.00Hz	0.01Hz	0.00Hz	○
P9.03	Waiting time for pre-traverse frequency	0.0～3600.0s	0.1s	0.0s	○
P9.04	Wobble operating amplitude	0.0～50.0%	0.1%	0.0%	○
P9.05	Jitter frequency	0.0～50.0%（with reference to P9.04）	0.1%	0.0%	○
P9.06	Traverse operating cycle	0.1～999.9s	0.1s	10.0s	○
P9.07	Rising time of trangle wave	0.0～98.0%(period of wobble)	0.1%	50.0%	○

Special Application function parameters PB

Group PB: Special Application function parameters					
Code	**Name**	**Setting range**	**Unit**	**Default setting**	**Note**
PB.00	Jog frequency source	0～4 0:P3.06 1:Panel potentiometer 2:P0.02 3:IVI 4:CI	0	0	○
PB.01	Selection of forward/ reverse dead time	0、1 0:Dead time is enabled (Min 0.1S) 1:Dead time can be set to 0（P0.05=0.0S、P0.20≥0.5Hz is needed）	1	0	○
PB.02	Inverter type selection	0:G type(normal) 1:P type(wind machine, water pump, power increases 1 level) Note: set as 1, P0.22 must set to 3.	1	0	×
PB.03	Short the run point before power on, set the run mode	0:after inverter is power on, run immediately 1:after inverter is power on, cut off the point and connect again to run	1	1	×

Factory setting (Group PF)

Group PF：Factory Setting					
Code	**Name**	**Setting range**	**Unit**	**Default setting**	**Note**
PF.00	Default password	-	-	-	*
PF.01	User's password	0:With no password protection 0001 － 9999: password protection	1	0000	○
PF.02	Software version	-	-	-	*

PF.03～PF.10	Reserve	-	-	-	*

B—Monitor function parameters

Code	Name	Description	Unit	Default setting	Note
b-00	Output frequency	Present output frequency	0.01Hz		*
b-01	Reference frequency	Present reference frequency	0.01Hz		*
b-02	Output voltage	Valid value of present output voltage	1V		*
b-03	Output current	Valid value of present output current	0.1A		*
b-04	Bus voltage	Present DC bus voltage	1V		*
b-05	Module temperature	IGBT Temperature of heatsink	10C		*
b-06	Motor overload speed	Current speed of motor	1r/min		*
b-07	Operating time	One continues operating time of inverter	1hour		*
b-08	Input/output terminal's status	Digital input/output terminal's status	——		*
b-10	Analog input CI	Value of analog input CI	0.01V		*
b-11	External pulse input	Input value of external pulse range	1ms		*
b-12	Inverter rated current	Inverter rated current	0.1A		*
b-13	Inverter rated voltage	Inverter rated voltage	1V		*
b-14	Display without unit	Display without unit	1		*
b-15	Inverter power class	Inverter power class	-		*
b-16	Display present counter value	Display present counter value	-		*
b-17	Reserve	-	-		*
……	Reserve	-	-		*
b-40	Reserve	-	-		*

7 Communication parameter

Name	Address	Function
Internal parameters setting	GGnnH	GG means parameter group NO., nn means parameters NO.
Command to inverter（06H）	2000H	0001H:Run command (forward)
		0002H:Forward running command
		0003H:Reverse running command
		0004H:Jog command(forward)
		0005H: Jog forward running command
		0006H: Jog reverse running command
		0007H:Dec to a stop
		0008H: Emergency stop command
		0009H: Jog stop command
		000AH: Fault reset command
	2001H	Frequency command setting via port
Monitoring status（03H）	2100H	Read Inverter's alarm code
	2101H	Read Inverter's status
		BIT0:Stop indicates，0:stop；1:run
		BIT1: Under-voltage indication,1:under-voltage;0:normal
		BIT2: Forward/reverse indicate,1:Reverse;0: forward
		BIT3: Forward/reverse indicate,1: Jog;0:none
		BIT4:Close loop control selection,1:close loop;0:none
		BIT5: wobble mode running flag,1:traverse;0:none
		BIT6:PLC running flag;1:PLC running,0: none
		BIT7:Multi-speed running flag of terminals 1: Multi-speed；0：None
		BIT8: Common running flag 1:run as normal;0：none。
		BIT9: Main frequency from communication interface;1:yes；0:no
		BIT10: Main frequency from analog input，1:yes;0：no
		BIT11: Running command from communication interface 1：yes；0：no
		BIT12: Password protection for parameters，1:yes;0：no
	2102H	Read inverter's reference frequency
	2103H	Read inverter's output frequency
	2104H	Read inverter's output current
	2105H	Read inverter's bus voltage
	2106H	Read inverter's output voltage
	2107H	Read motor's speed
	2108H	Read module temperature
	2109H	Read analog input via VI
	210AH	Read analog input via CI
	210BH	Read inverter's software version
	210CH	I/O terminal status
		Bit0：X1
		Bit1：X2
		Bit2：X3
		Bit6：FWD
		Bit7：REV
		Bit9： relay output
Read data from function code（03H）	GGnnH（GG： Group No. of function code, nn :function code）	Inverter responses to the data,When use Modbus address, the nn must be turned into hex
Write data to function code（06H）	GGnnH（GG： Group No. of function code, nn :function code）	Data be wrote in the inverter, When use Modbus address, the nn must be turned into hex.

Take the following as examples:

Read function code P1.02
01H，03H，01H，02H，00H，01H，CRC1，CRC2
Read the reference frequency of inverter
01H，03H，21H，02H，00H，01H，CRC1，CRC2
Write function code P1.02 with value 1
01H，06H，01H，02H，00H，01H，CRC1，CRC2
Running command
01H，06H，20H，00H，00H，01H，CRC1，CRC2

Definition of fault code

Fault code	Instruction
01H	Fault function code, Inverter can not find 03H，06H，08H。
02H	Fault data address, Inverter can not find data address
03H	Fault data, data over the limit

Note：The parameter address must be in hex format, as the function codes of parameters are in decimal system, so make sure turn them to hex format. For example, the Modbus address of function code P2.11 is 020BH.